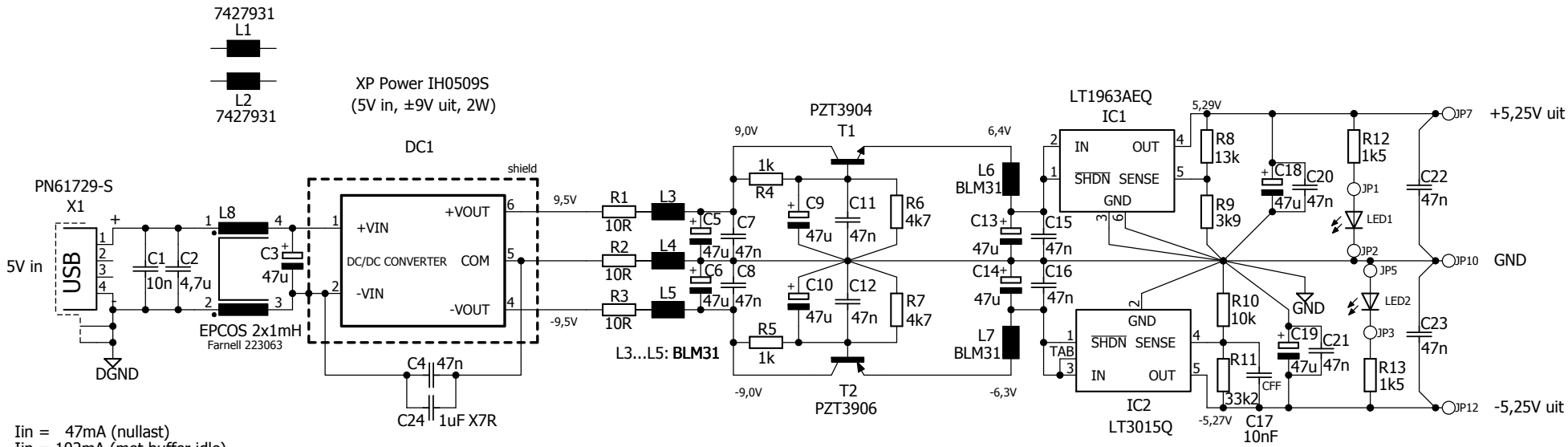

Iin = 47mA (nullast)
Iin = 102mA (met buffer idle)
Iin = 180mA (buffer max)
Iin = 240mA (buffer clip)
Iin = 281mA (2x 100Ω load)

Ferrite Bead "7427931" = Wurth 7427931

Ferrite Bead "BLM31" = muRata BLM31AJ601SN1L

Alle condensatoren 10nF, 47nF, 100nF en 4,7uF: MLCC keramisch, X7R, 50V

Alle Elcos 47uF: Panasonic POSCAP TPB series 47uF/10V 10TPB47M, Farnell: 2354817 (ESR=70mΩ @ 100kHz)

Print is 94mm x 43mm, voor Bimbox 5002/12

Iuit nominaal = ±15...30mA
Iuit maximaal = ±100mA

Rendement:
Iuit = 2x30mA: 33% (Rload = 2x 180Ω)
Iuit = 2x50mA: 40% (Rload = 2x 100Ω)

H1 MOUNT-HOLE2.8
H2 MOUNT-HOLE2.8
H3 MOUNT-HOLE2.8
H4 MOUNT-HOLE2.8
H5 MOUNT-HOLE2.8
H6 MOUNT-HOLE2.8
H7 MOUNT-HOLE2.8
H8 MOUNT-HOLE2.8

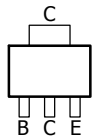

PZT3904
PZT3906

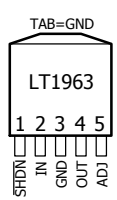

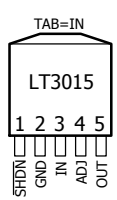

all topview

Miedema Geluidstechniek
Rika Hopperlaan 20 3584 GN Utrecht
Tel. 030-2511913 info@miedemageluid.nl

TITLE: Hi-Z to 50R voeding uit USB

File: Hi-Z to 50R DC-DC v130 REV: 1.30

Date: 07-01-2016 14:47 Get: Gertjan Miedema